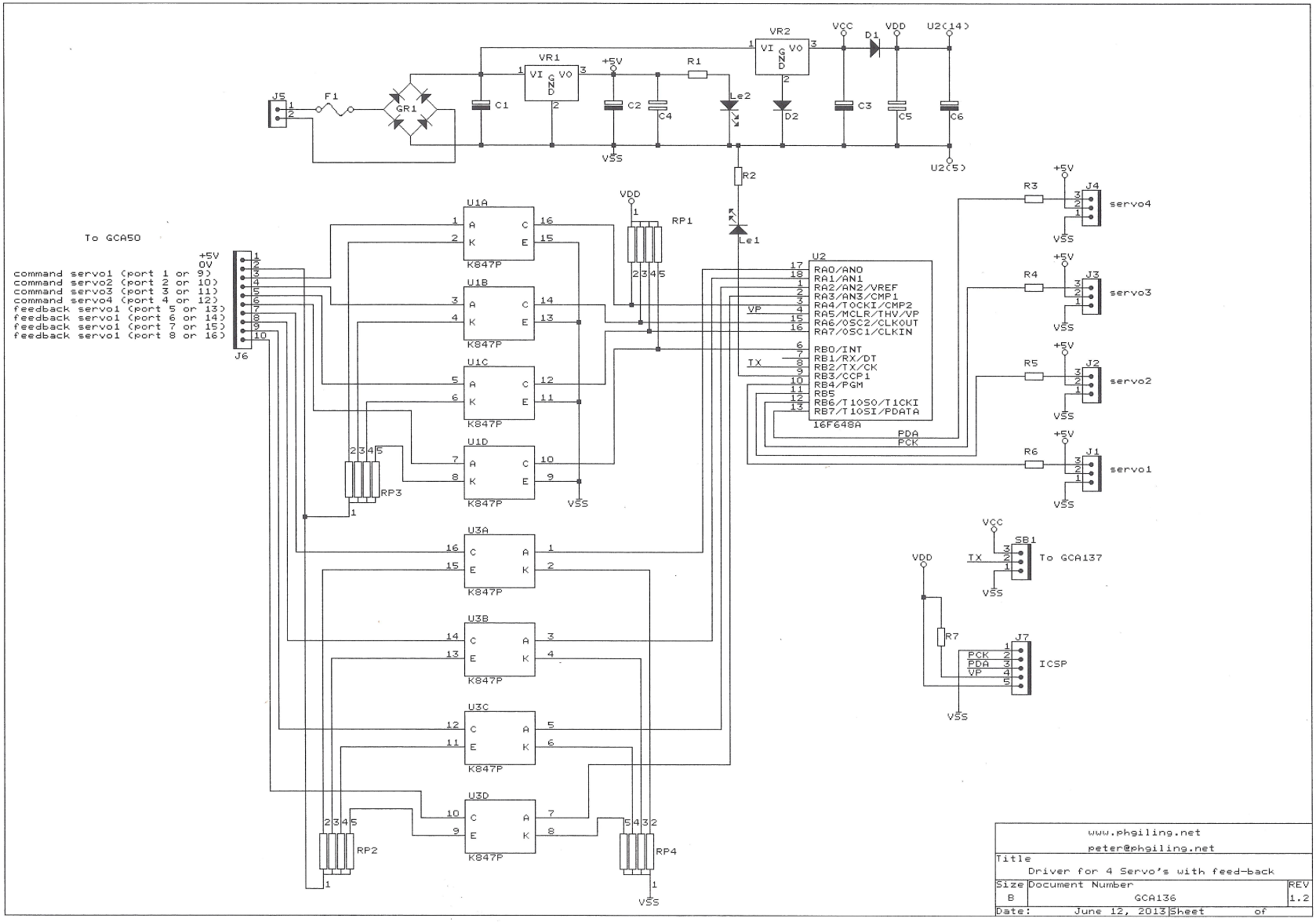
J5
F1
GR1
VR1
VI GND VO
C1
+5V
C2
C4
R1
Le2
VR2
VI GND VO
D2
VCC
D1
VDD
C3
C5
C6
U2(14)
U2(5)
VSS
R2
Le1
RP1
U1A
U1B
U1C
U1D
K847P
U2
16F648A
RA0/AN0
RA1/AN1
RA2/AN2/VREF
RA3/AN3/CMP1
RA4/T0CKI/CMP2
RA5/MCLR/THV/VP
RA6/OSC2/CLKOUT
RA7/OSC1/CLKIN
RB0/INT
RB1/RX/DT
RB2/TX/CK
RB3/CCP1
RB4/PGM
RB5
RB6/T1OSO/T1CKI
RB7/T1OSI/PDATA
VP
TX
PDA
PCK
R3
R4
R5
R6
J4
J3
J2
J1
servo4
servo3
servo2
servo1
To GCA50
+5V
0V
command servo1 (port 1 or 9)
command servo2 (port 2 or 10)
command servo3 (port 3 or 11)
command servo4 (port 4 or 12)
feedback servo1 (port 5 or 13)
feedback servo1 (port 6 or 14)
feedback servo1 (port 7 or 15)
feedback servo1 (port 8 or 16)
J6
RP3
U3A
U3B
U3C
U3D
RP2
RP4
SB1
To GCA137
R7
J7
ICSP
www.phgiling.net
peter@phgiling.net
Title
Driver for 4 Servo's with feed-back
Size
B
Document Number
GCA136
REV
1.2
Date:
June 12, 2013
Sheet
of