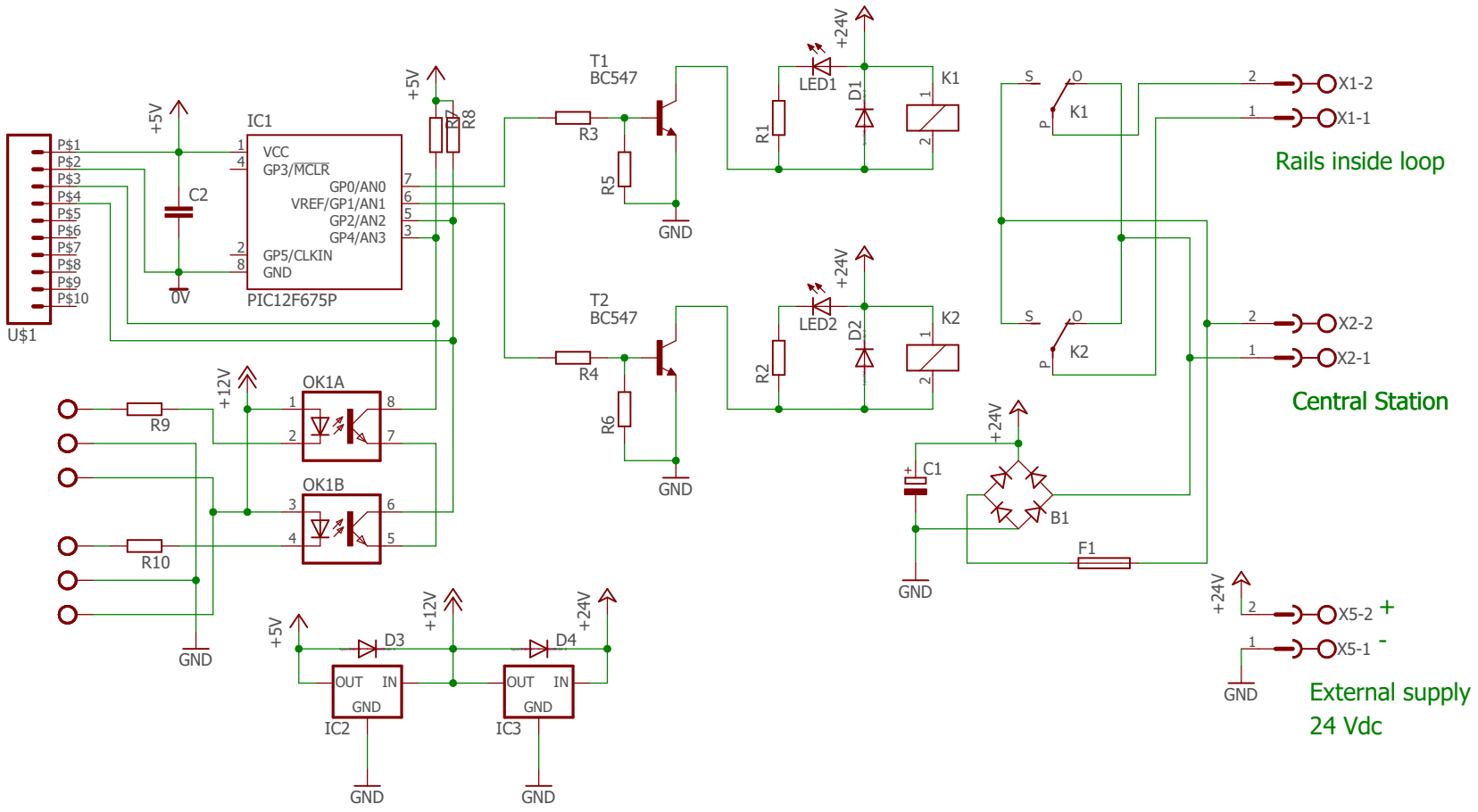

Giling Computer Applications
peter@phgiling.net

TITLE: GCA21

Document Number:

REV:

Date: not saved!

Sheet: 1/1

10-5-2018 20:30 C:\Users\Giling-pc\Documents\eagle\gca21\GCA21.sch (Sheet: 1/1)