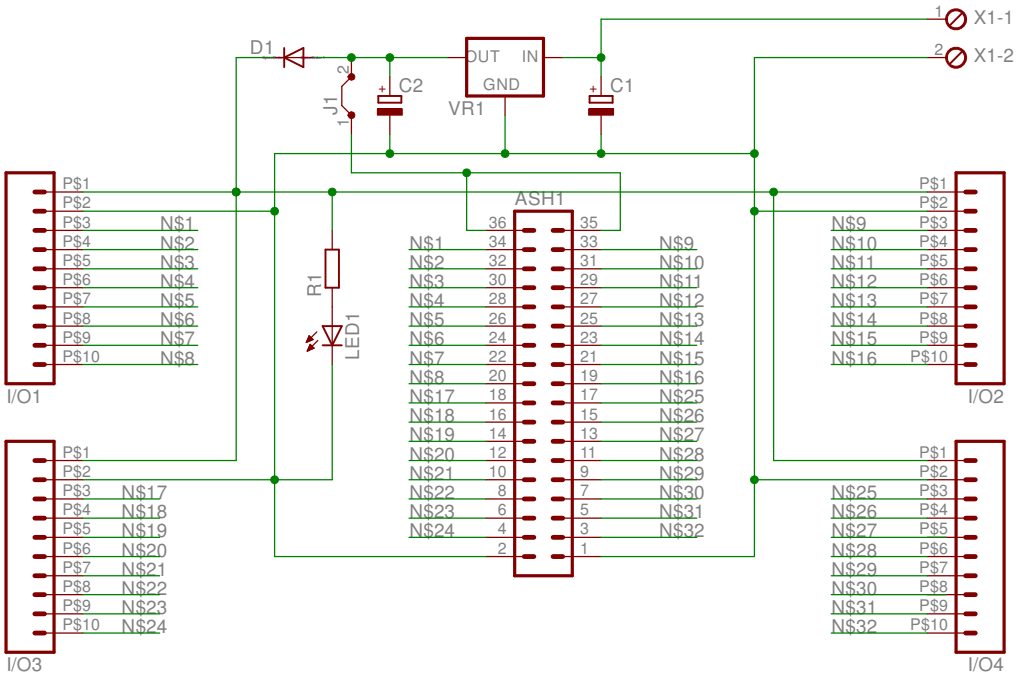

32 bits I/O shield for DCCPP central commander with Arduino Mega.